CML Microcircuits

COMMUNICATION SEMICONDUCTORS

High Resolution Circuit Diagrams for DE6181

Complementary to CML User Manual: UM6181/5 September 2011

© 2011 CML Microsystems Plc

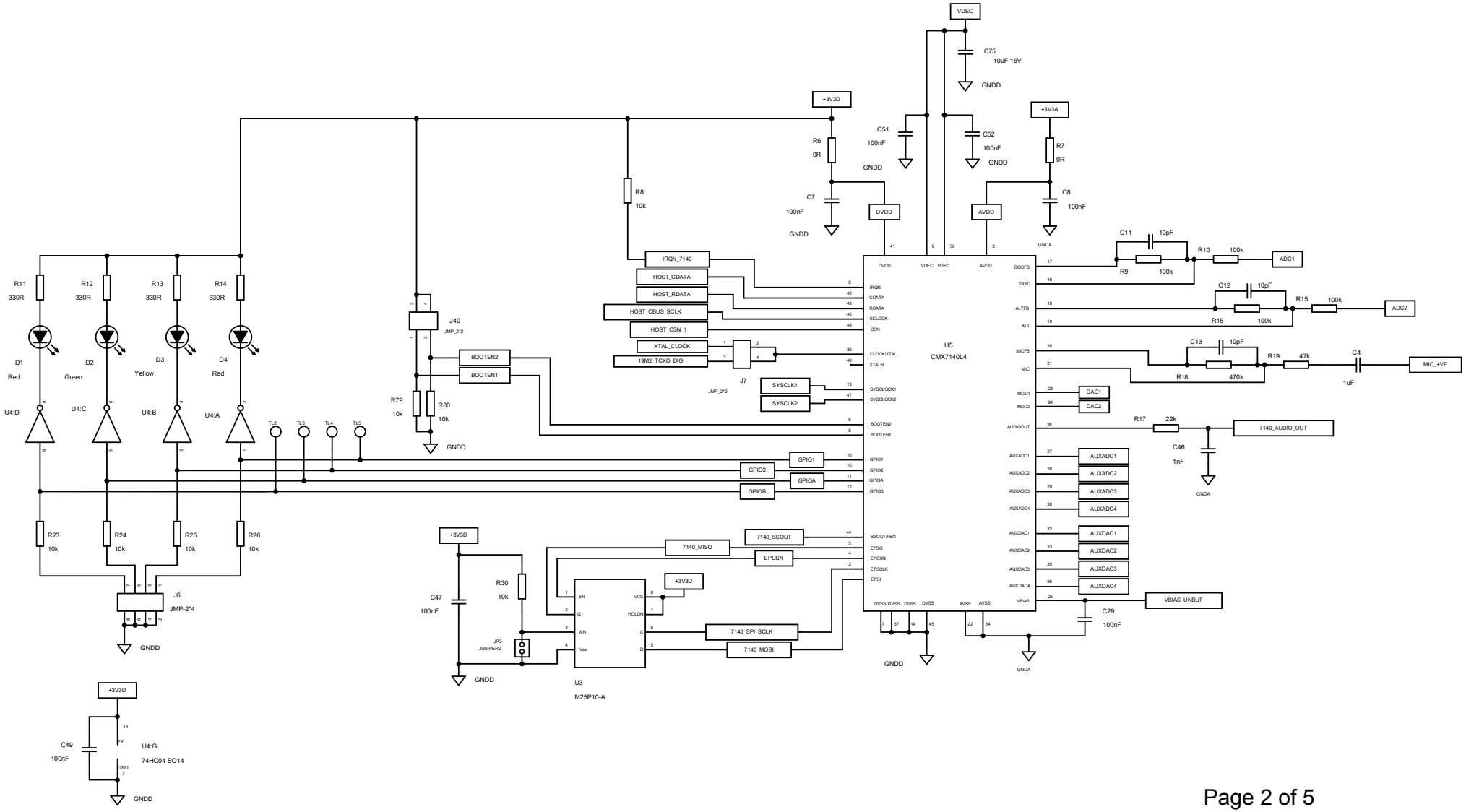
VDEC
C75
10uF 16V
GNDD
+3V3D
+3V3A
C51
100nF
C52
100nF
R6
0R
R7
0R
C7
100nF
C8
100nF
R8
10k
DVDD
AVDD
GNDA
IRQN_7140
HOST_CDATA
HOST_RDATA
HOST_CBUS_SCLK
HOST_CSN_1
XTAL_CLOCK
19M2_TCXO_DIG
J7
JMP_2*2
SYSCLK1
SYSCLK2
BOOTEN2
BOOTEN1
J40
JMP_2*2
R79
10k
R80
10k
U5
CMX7140L4
C11
10pF
R9
100k
R10
100k
ADC1
C12
10pF
R16
100k
R15
100k
ADC2
C13
10pF
R18
470k
R19
47k
C4
1uF
MIC_+VE
DAC1
DAC2
R17
22k
7140_AUDIO_OUT
C46
1nF
AUXADC1
AUXADC2
AUXADC3
AUXADC4
AUXDAC1
AUXDAC2
AUXDAC3
AUXDAC4
VBIAS_UNBUF
C29
100nF
GPIO1
GPIO2
GPIOA
GPIOB
7140_SSOUT
7140_MISO
EPCSN
7140_SPI_SCLK
7140_MOSI
R11
330R
R12
330R
R13
330R
R14
330R
D1
Red
D2
Green
D3
Yellow
D4
Red
U4:D
U4:C
U4:B
U4:A
TL2
TL3
TL4
TL5
R23
10k
R24
10k
R25
10k
R26
10k
J6
JMP-2*4
C47
100nF
R30
10k
JP2
JUMPER2
U3
M25P10-A
C49
100nF
U4:G
74HC04 SO14

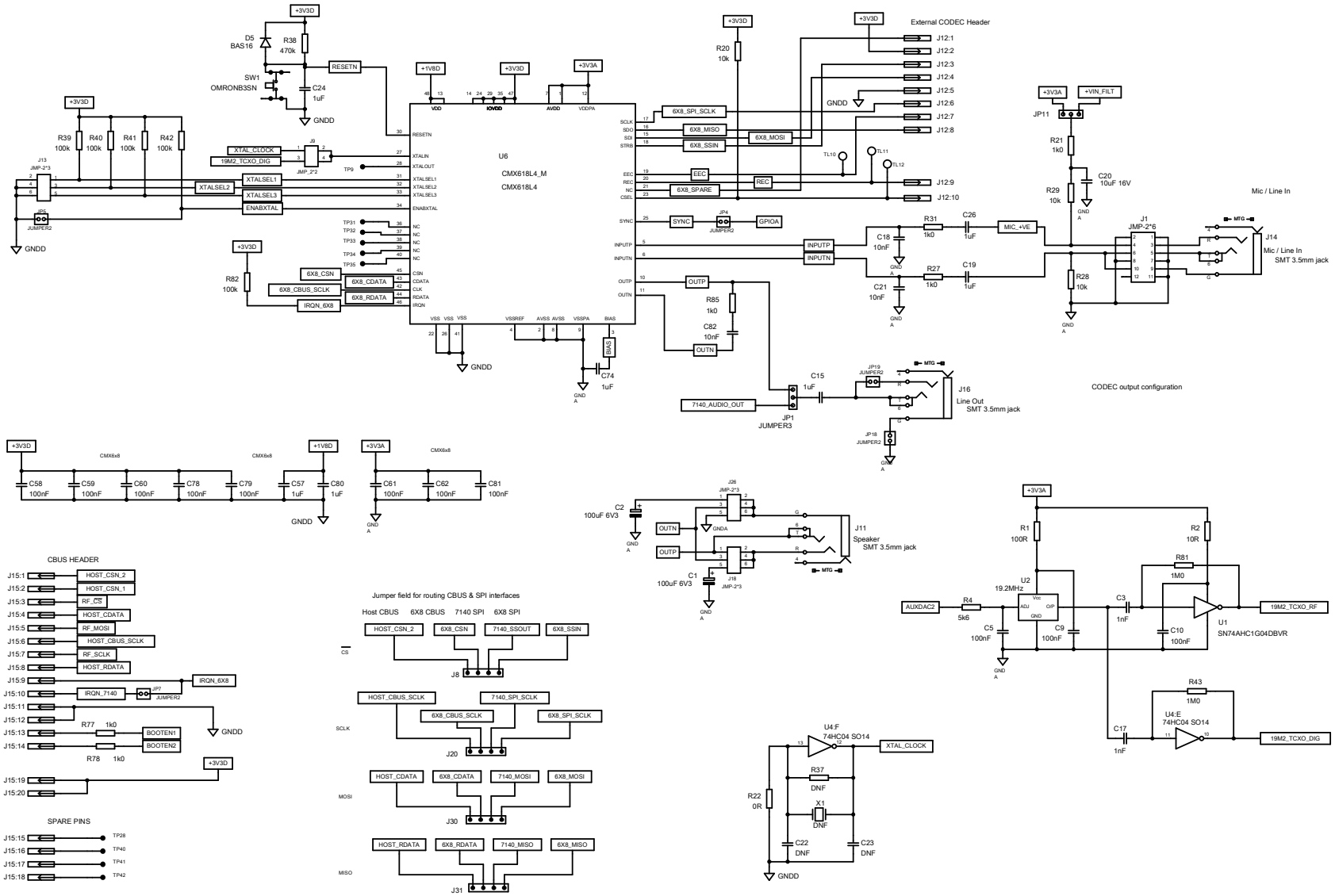
U6
CMX618L4_M
CMX618L4
External CODEC Header
Mic / Line In
Mic / Line In
SMT 3.5mm jack
Line Out
SMT 3.5mm jack
CODEC output configuration
Speaker
SMT 3.5mm jack
CBUS HEADER
Jumper field for routing CBUS & SPI interfaces
Host CBUS
6X8 CBUS
7140 SPI
6X8 SPI
SPARE PINS
U1
SN74AHC1G04DBVR
U4:F
74HC04 SO14
U4:E
74HC04 SO14
XTAL_CLOCK
19M2_TCXO_RF
19M2_TCXO_DIG
GNDD

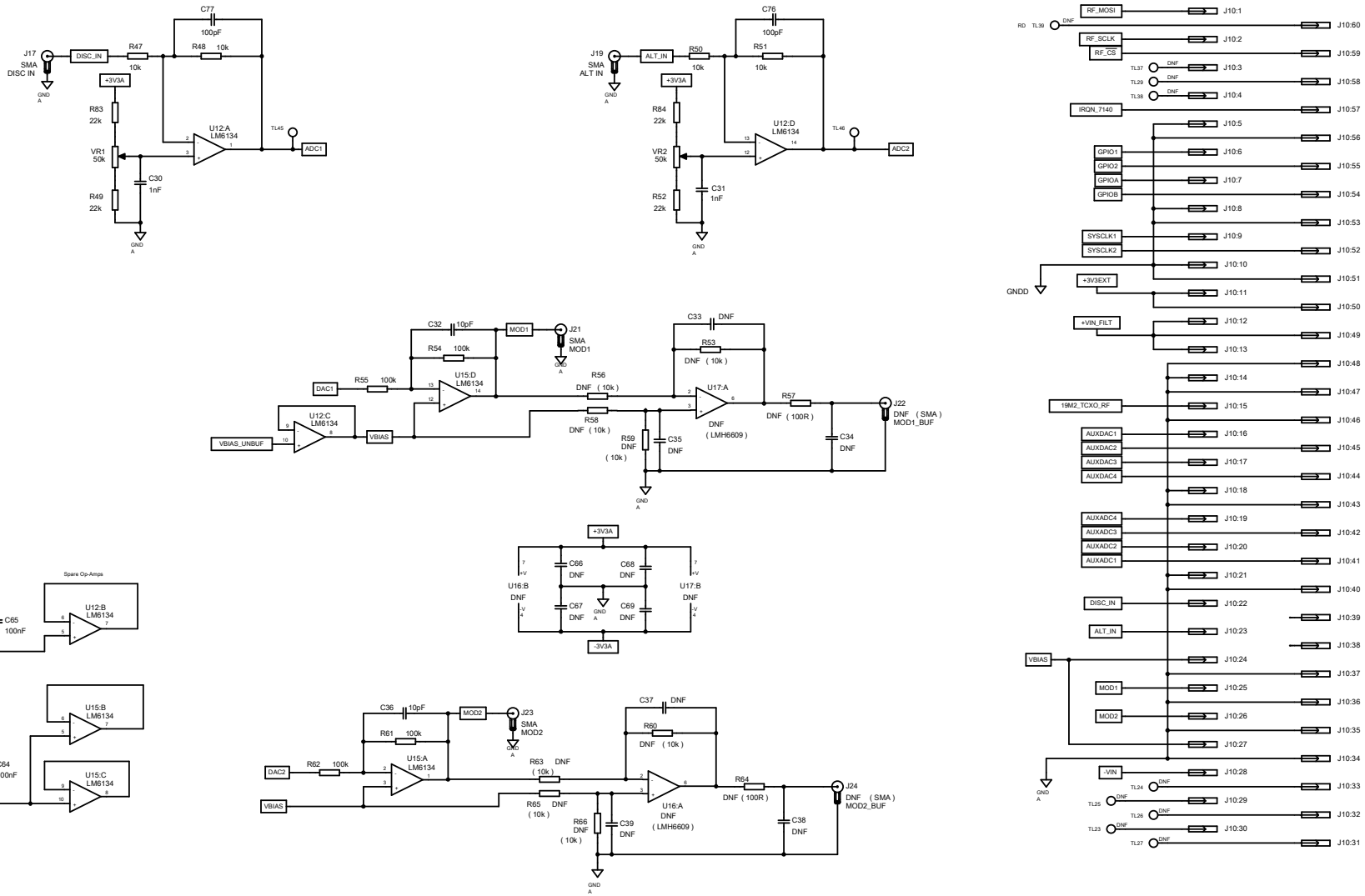
J17
SMA
DISC IN
DISC_IN
R47
10k
C77
100pF
R48
10k
+3V3A
R83
22k
VR1
50k
R49
22k
C30
1nF
U12:A
LM6134
TL45
ADC1
J19
SMA
ALT IN
ALT_IN
R50
10k
C76
100pF
R51
10k
R84
22k
VR2
50k
R52
22k
C31
1nF
U12:D
LM6134
TL46
ADC2
RF_MOSI
RF_SCLK
RF_CS
IRQN_7140
GPIO1
GPIO2
GPIOA
GPIOB
SYSCLK1
SYSCLK2
+3V3EXT
GNDD
+VIN_FILT
19M2_TCXO_RF
AUXDAC1
AUXDAC2
AUXDAC3
AUXDAC4
AUXADC4
AUXADC3
AUXADC2
AUXADC1
DISC_IN
ALT_IN
VBIAS
MOD1
MOD2
-VIN
J10:1
J10:2
J10:3
J10:4
J10:5
J10:6
J10:7
J10:8
J10:9
J10:10
J10:11
J10:12
J10:13
J10:14
J10:15
J10:16
J10:17
J10:18
J10:19
J10:20
J10:21
J10:22
J10:23
J10:24
J10:25
J10:26
J10:27
J10:28
J10:29
J10:30
J10:31
J10:32
J10:33
J10:34
J10:35
J10:36
J10:37
J10:38
J10:39
J10:40
J10:41
J10:42
J10:43
J10:44
J10:45
J10:46
J10:47
J10:48
J10:49
J10:50
J10:51
J10:52
J10:53
J10:54
J10:55
J10:56
J10:57
J10:58
J10:59
J10:60
C32
10pF
R54
100k
MOD1
J21
SMA
MOD1
DAC1
R55
100k
U15:D
LM6134
U12:C
LM6134
VBIAS_UNBUF
VBIAS
R56
DNF (10k)
R58
DNF (10k)
R59
DNF
(10k)
C35
DNF
C33
DNF
R53
DNF (10k)
U17:A
DNF
(LMH6609)
R57
DNF (100R)
C34
DNF
J22
DNF (SMA)
MOD1_BUF
+3V3A
C66
DNF
C68
DNF
U16:B
DNF
U17:B
DNF
C67
DNF
C69
DNF
-3V3A
+3V3A
U12:E
LM6134
C65
100nF
Spare Op-Amps
U12:B
LM6134
+3V3A
U15:E
LM6134
C64
100nF
U15:B
LM6134
U15:C
LM6134
C36
10pF
MOD2
J23
SMA
MOD2
R61
100k
DAC2
R62
100k
U15:A
LM6134
VBIAS
R63
DNF
(10k)
R65
DNF
(10k)
R66
DNF
(10k)
C39
DNF
C37
DNF
R60
DNF (10k)
U16:A
DNF
(LMH6609)
R64
DNF (100R)
C38
DNF
J24
DNF (SMA)
MOD2_BUF
GND
A

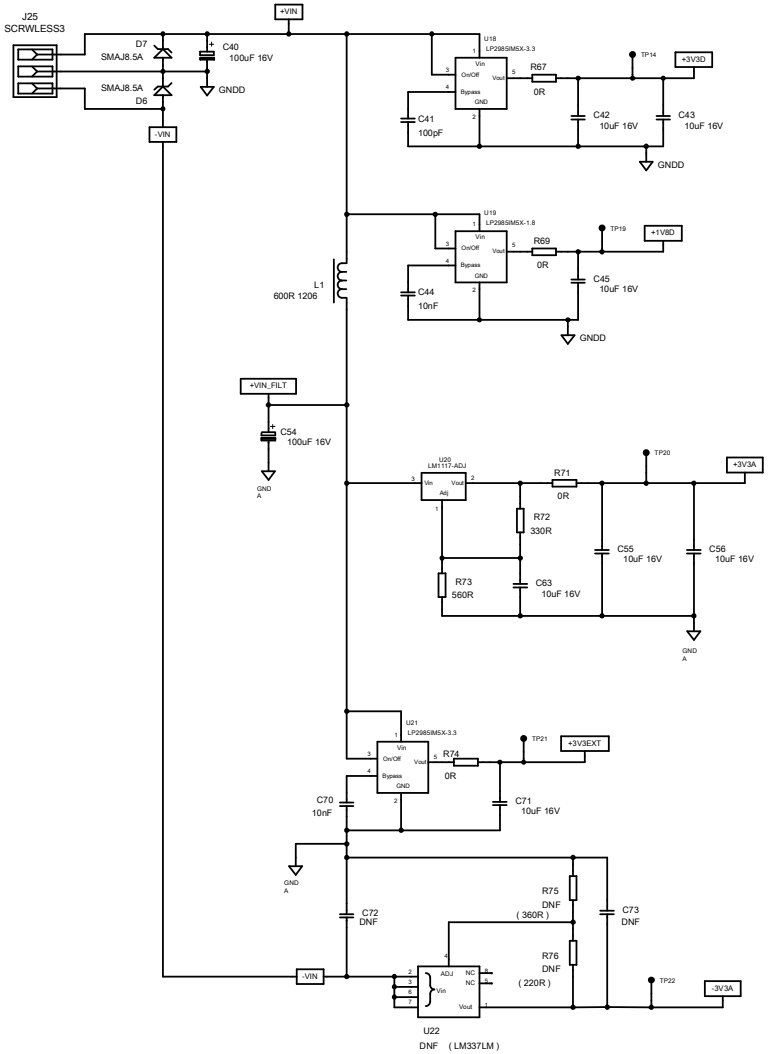
J25
SCRWLESS3
D7
SMAJ8.5A
SMAJ8.5A
D6
C40
100uF 16V
GNDD
+VIN
-VIN
U19
LP2985IM5X-3.3
Vin
On/Off
Bypass
GND
Vout
R67
0R
TP14
+3V3D
C41
100pF
C42
10uF 16V
C43
10uF 16V
GNDD
U19
LP2985IM5X-1.8
R69
0R
TP19
+1V8D
C44
10nF
C45
10uF 16V
GNDD
L1
600R 1206
+VIN_FILT
C54
100uF 16V
GND
A
U20
LM1117-ADJ
Vin
Vout
Adj
R71
0R
TP20
+3V3A
R72
330R
R73
560R
C63
10uF 16V
C55
10uF 16V
C56
10uF 16V
GND
A
U21
LP2985IM5X-3.3
R74
0R
TP21
+3V3EXT
C70
10nF
C71
10uF 16V
GND
A
C72
DNF
R75
DNF
(360R)
C73
DNF
R76
DNF
(220R)
-VIN
ADJ
NC
NC
Vin
Vout
TP22
-3V3A
U22
DNF (LM337LM)

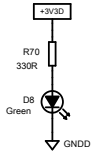
+3V3D
R70
330R
D8
Green
GNDD

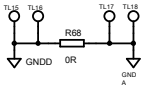
TL45
TL46
TL47
TL48
R68
0R
GNDD
GND
A